FORTENS™

STRONG PARTNERS.
TOUGH TRUCKS.™

H4.0-5.5FT SERIES TECHNICAL GUIDE

STAGE V

WWW.HYSTER.COM

TRUCK DIMENSIONS

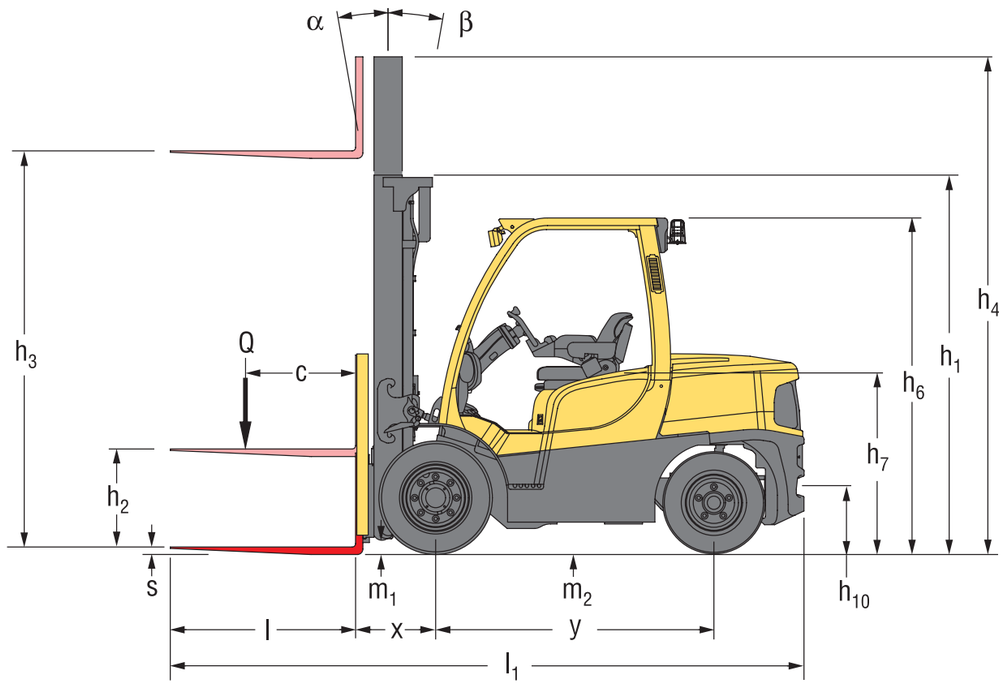

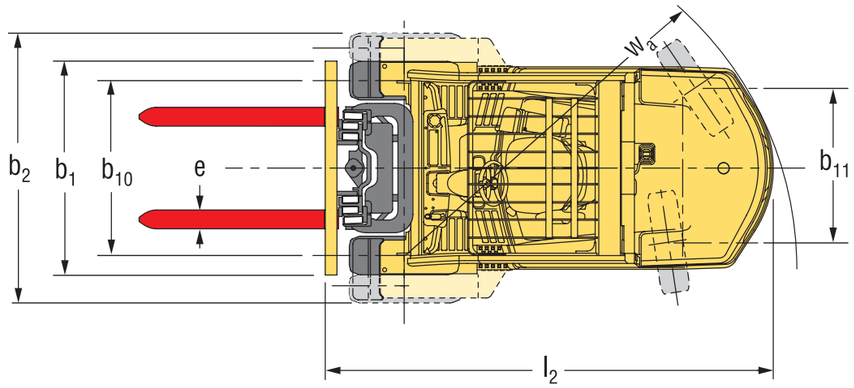

MAST AND CAPACITY INFORMATION

H4.0FT5 RATED CAPACITY KG@ 500-700 MM LOAD CENTRE

	Maximum fork height $h_3 + s$ (mm)	Mast tilt (°)		Lowered height h_1 (mm)	Extended height h_4 (mm)		Free lift height $h_2 + s$ (m)	Superelastic tyres						Radial tyres					
								Without sideshift (kg)			With ISS (kg)			Without sideshift (kg)					
								H4.0FT5			H4.0FT5			H4.0FT5			H4.0FT5		
		F	B		w/o LB	w LB	w/o LB	500 LC	600 LC	700 LC	500 LC	600 LC	700 LC	500 LC	600 LC	700 LC	500 LC	600 LC	700 LC
2-STAGE LIMITED FREE LIFT	3050	6°	10°	2175	3815	4300	150	4000	3670	3580	4000	3670	3470	4000	3670	3580	4000	3670	3470
	3650	6°	10°	2475	4415	4900	150	4000	3670	3570	4000	3670	3460	4000	3670	3570	4000	3670	3460
	4250	6°	10°	2775	5015	5500	150	4000	3670	3550	4000	3670	3440	4000	3670	3550	4000	3670	3440
	4950	6°	6°	3225	5715	6200	150	3880	3560	3430	3880	3560	3320	3880	3560	3420	3880	3560	3320
2-STAGE FULL FREE LIFT	3075	6°	10°	2175	3890	4325	1355	4000	3670	3450	4000	3670	3400	4000	3670	3450	4000	3670	3400
	3675	6°	10°	2475	4490	4925	1655	4000	3670	3440	4000	3650	3380	4000	3670	3440	4000	3670	3380
3-STAGE FULL FREE LIFT	4415	6°	6°	2175	5225	5665	1355	4000	3670	3430	3970	3630	3350	4000	3670	3430	3970	3630	3350
	4950	6°	6°	2375	5765	6200	1555	3880	3560	3310	3840	3510	3230	3870*	3550*	3310*	3830*	3510*	3230*
	5250	6°	6°	2475	6065	6500	1655	3800	3490	3240	3760	3440	3170	3800*	3490*	3230*	3750*	3430*	3160*
	5550	6°	6°	2575	6365	6800	1755	3730	3420	3170	3670	3360	3090	3730**	3420**	3170**	3670**	3360**	3090**
	6000	6°	6°	2775	6815	7250	1955	3600	3290	3050	3530	3230	2980	3600**	3310**	3050**	3530**	3230**	2980**

H4.0FT6 RATED CAPACITY KG@ 600-700 MM LOAD CENTRE

	Maximum fork height $h_3 + s$ (mm)	Mast tilt (°)		Lowered height h_1 (mm)	Extended height h_4 (mm)		Free lift height $h_2 + s$ (m)	Superelastic tyres				Radial tyres			
								Without sideshift (kg)		With ISS (kg)		Without sideshift (kg)		With ISS (kg)	
								H4.0FT6		H4.0FT6		H4.0FT6		H4.0FT6	
		F	B		w/o LB	w LB	w/o LB	600 LC	700 LC	600 LC	700 LC	600 LC	700 LC	600 LC	700 LC
2-STAGE LIMITED FREE LIFT	3050	6°	10°	2175	3815	4300	150	4000	3890	4000	3770	4000	3890	4000	3770
	3650	6°	10°	2475	4415	4900	150	4000	3870	4000	3750	4000	3870	4000	3750
	4250	6°	10°	2775	5015	5500	150	4000	3860	4000	3740	4000	3860	4000	3740
	4950	6°	6°	3225	5715	6200	150	3890	3720	3890	3610	3890	3720	3890	3610
2-STAGE FULL FREE LIFT	3075	6°	10°	2175	3890	4325	1355	4000	3750	4000	3690	4000	3750	4000	3690
	3675	6°	10°	2475	4490	4925	1655	4000	3730	3990	3670	4000	3730	3990	3670
3-STAGE FULL FREE LIFT	4415	6°	6°	2175	5225	5665	1355	4000	3720	3950	3640	4000	3720	3950	3640
	4950	6°	6°	2375	5765	6200	1555	3880	3600	3820	3520	3880*	3600*	3820*	3520*
	5250	6°	6°	2475	6065	6500	1655	3810	3530	3740	3450	3810*	3520*	3740*	3440*
	5550	6°	6°	2575	6365	6800	1755	3740	3450	3660	3370	3740**	3450**	3660**	3370**
	6000	6°	6°	2775	6815	7250	1955	3620	3330	3530	3250	3620**	3330**	3530**	3250**

H4.5FTS5 RATED CAPACITY KG@ 500-700 MM LOAD CENTRE

	Maximum fork height $h_3 + s$ (mm)	Mast tilt (°)		Lowered height h_1 (mm)	Extended height h_4 (mm)		Free lift height $h_2 + s$ (m)	Superelastic tyres						Radial tyres					
								Without sideshift (kg)			With ISS (kg)			Without sideshift (kg)			With ISS (kg)		
								H4.5FTS5			H4.5FTS5			H4.5FTS5			H4.5FTS5		
		F	B		w/o LB	w LB	w/o LB	500 LC	600 LC	700 LC	500 LC	600 LC	700 LC	500 LC	600 LC	700 LC	500 LC	600 LC	700 LC
2-STAGE LIMITED FREE LIFT	2800	6°	10°	2215	3730	4065	160	4500	4000	3890	4440	4000	3770	4500	4000	3890	4440	4000	3770
	3400	6°	10°	2515	4330	4665	160	4500	4000	3870	4420	4000	3750	4500	4000	3870	4420	4000	3750
	4000	6°	10°	2815	4930	5265	160	4500	4000	3860	4410	4000	3740	4500	4000	3860	4410	4000	3740
	4700	6°	6°	3265	5630	5965	160	4380	3900	3730	4260	3900	3620	4380	3890	3730	4260	3890	3610
	5300	6°	6°	3665	6230	6565	160	4230	3760	3580	4090	3750	3470	4230*	3760*	3570*	4080*	3750*	3460*
	5900	6°	6°	4065	6830	7165	160	4040	3620	3420	3900	3580	3310	4040**	3610**	3410**	3900**	3580**	3310**
2-STAGE FULL FREE LIFT	2825	6°	10°	2215	3810	4090	1230	4500	4000	3860	4410	4000	3740	4500	4000	3860	4410	4000	3740
	3425	6°	10°	2515	4410	4690	1530	4500	4000	3840	4390	4000	3720	4500	4000	3840	4390	4000	3720
3-STAGE FULL FREE LIFT	4145	6°	6°	2215	5130	5415	1230	4500	4000	3820	4370	4000	3700	4500	4000	3820	4370	4000	3700
	5000	6°	6°	2515	5985	6265	1530	4300	3820	3630	4150	3810	3520	4250*	3820*	3630*	4150**	3810**	3520**
	5300	6°	6°	2615	6285	6565	1630	4210	3750	3560	4070	3730	3450	4210**	3750**	3560**	4070**	3730**	3450**

H4.5FT6 RATED CAPACITY KG@ 600-700 MM LOAD CENTRE

	Maximum fork height $h_3 + s$ (mm)	Mast tilt (°)		Lowered height h_1 (mm)	Extended height h_4 (mm)		Free lift height $h_2 + s$ (m)	Superelastic tyres				Radial tyres			
								Without sideshift (kg)		With ISS (kg)		Without sideshift (kg)		With ISS (kg)	
								H4.5FT6		H4.5FT6		H4.5FT6		H4.5FT6	
		F	B		w/o LB	w LB	w/o LB	600 LC	700 LC	600 LC	700 LC	600 LC	700 LC	600 LC	700 LC
2-STAGE LIMITED FREE LIFT	2800	6°	10°	2215	3730	4065	160	4500	4340	4500	4210	4500	4340	4500	4210
	3400	6°	10°	2515	4330	4665	160	4500	4330	4500	4200	4500	4330	4500	4200
	4000	6°	10°	2815	4930	5265	160	4500	4310	4500	4180	4500	4310	4500	4180
	4700	6°	6°	3265	5630	5965	160	4390	4180	4390	4060	4390	4180	4390	4060
	5300	6°	6°	3665	6230	6565	160	4250	4030	4230	3910	4240*	4020*	4220*	3900*
	5900	6°	6°	4065	6830	7165	160	4100	3860	4050	3740	4080*	3840*	4030*	3730*
2-STAGE FULL FREE LIFT	2825	6°	10°	2215	3810	4090	1230	4500	4310	4500	4180	4500	4310	4500	4180
	3425	6°	10°	2515	4410	4690	1530	4500	4290	4500	4170	4500	4290	4500	4170
3-STAGE FULL FREE LIFT	4145	6°	6°	2215	5130	5415	1230	4500	4270	4490	4150	4500	4270	4490	4150
	5000	6°	6°	2515	5985	6265	1530	4310	4080	4290	3960	4310*	4070*	4280*	3950*
	5300	6°	6°	2615	6285	6565	1630	4240	4000	4210	3890	4230*	3990*	4200*	3880*

MAST AND CAPACITY INFORMATION

H5.0FT RATED CAPACITY KG@ 600-700 MM LOAD CENTRE

	Maximum fork height $h_3 + s$ (mm)	Mast tilt (°)		Lowered height h_1 (mm)	Extended height h_4 (mm)		Free lift height $h_2 + s$ (m)	Superelastic tyres				Radial tyres			
								Without sideshift (kg)		With ISS (kg)		Without sideshift (kg)		With ISS (kg)	
								H5.0FT		H5.0FT		H5.0FT		H5.0FT	
		F	B		w/o LB	w LB	w/o LB	600 LC	700 LC	600 LC	700 LC	600 LC	700 LC	600 LC	700 LC
2-STAGE LIMITED FREE LIFT	2800	6°	10°	2215	3730	4065	160	5000	4810	5000	4670	5000	4810	5000	4670
	3400	6°	10°	2515	4330	4665	160	5000	4790	5000	4650	5000	4790	5000	4650
	4000	6°	10°	2815	4930	5265	160	5000	4780	5000	4640	5000	4780	5000	4640
	4700	6°	6°	3265	5630	5965	160	4890	4640	4880	4510	4880	4640	4870	4500
	5300	6°	6°	3665	6230	6565	160	4740	4480	4700	4350	4730*	4470*	4700*	4340*
	5900	6°	6°	4065	6830	7165	160	4570	4300	4520	4170	4570**	4300**	4510**	4170**
2-STAGE FULL FREE LIFT	2825	6°	10°	2215	3810	4090	1230	5000	4770	5000	4640	5000	4770	5000	4640
	3425	6°	10°	2515	4410	4690	1530	5000	4760	5000	4620	5000	4760	5000	4620
3-STAGE FULL FREE LIFT	4145	6°	6°	2215	5130	5415	1230	5000	4740	4990	4610	5000	4740	4990	4610
	5000	6°	6°	2515	5985	6265	1530	4800	4530	4770	4410	4800*	4530*	4760*	4400*
	5300	6°	6°	2615	6285	6565	1630	4730	4450	4690	4330	4730**	4450**	4680**	4330**

H5.5FT RATED CAPACITY KG@ 600-700 MM LOAD CENTRE

	Maximum fork height $h_3 + s$ (mm)	Mast tilt (°)		Lowered height h_1 (mm)	Extended height h_4 (mm)		Free lift height $h_2 + s$ (m)	Superelastic tyres				Radial tyres			
								Without sideshift (kg)		With ISS (kg)		Without sideshift (kg)		With ISS (kg)	
								H5.5FT		H5.5FT		H5.5FT		H5.5FT	
		F	B		w/o LB	w LB	w/o LB	600 LC	700 LC	600 LC	700 LC	600 LC	700 LC	600 LC	700 LC
2-STAGE LIMITED FREE LIFT	2800	6°	10°	2215	3730	4065	160	5500	5280	5500	5130	5500	5280	5500	5130
	3400	6°	10°	2515	4330	4665	160	5500	5260	5500	5120	5500	5260	5500	5120
	4000	6°	10°	2815	4930	5265	160	5500	5250	5500	5100	5500	5250	5500	5100
	4700	6°	6°	3265	5630	5965	160	5380*	5110*	5370*	4970*	5380*	5110*	5370*	4960*
	5300	6°	6°	3665	6230	6565	160	5230*	4940*	5190*	4800*	5220*	4930*	5180*	4790*
	5900	6°	6°	4065	6830	7165	160	5050**	4750**	5000*	4620*	5050**	4750**	4990**	4610**
2-STAGE FULL FREE LIFT	2825	6°	10°	2215	3810	4090	1230	5500	5250	5500	5100	5500	5250	5500	5100
	3425	6°	10°	2515	4410	4690	1530	5500	5230	5500	5080	5500	5230	5500	5080
3-STAGE FULL FREE LIFT	4145	6°	6°	2215	5130	5415	1230	5500	5210	5490	5070	5500	5210	5490	5070
	5000	6°	6°	2515	5985	6265	1530	5290*	5000*	5260*	4860*	5290*	4990*	5260*	4860*
	5300	6°	6°	2615	6285	6565	1630	5210**	4920**	5170**	4780**	5210**	4910**	5170**	4780**

RATED CAPACITIES

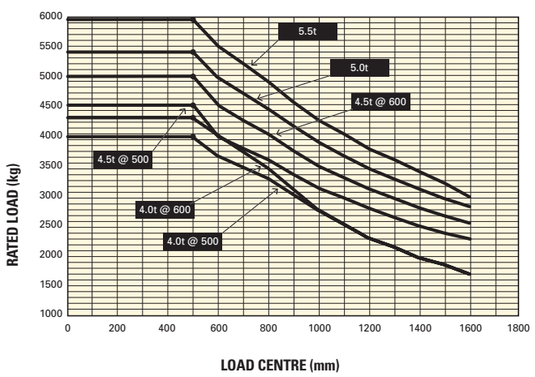

Load centre - distance from front of forks to centre of gravity of load.

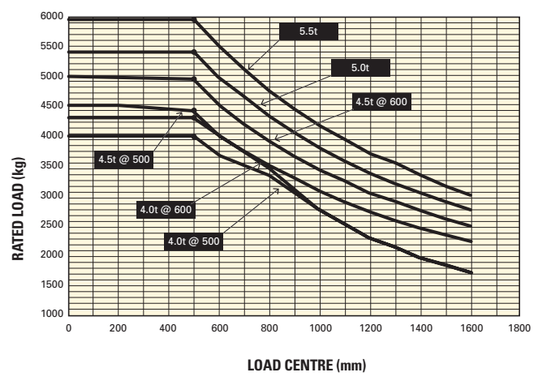

Rated load - based on vertical mast.

POWERTRAINS

GENERAL	1-1	Manufacturer			HYSTER
	1-2	Model designation			H4.0-5.5FT
	1-3	Powertrain / drivetrain			Diesel
ENGINE	7-1	Engine manufacturer / model			Kubota / V3800 E4
	7-1a	CE / EPA Tier compliance			Stage V
	7-2	Engine power output according to ISO 1585		kW	55.0
	7-3	Rated speed		rpm	2200
	7-3-1	Engine torque @rpm (1/min)		N-m	308 @ 1400
	7-4	Number of cylinders / displacement		# / cm^3	4 / 3769
	7-8	Alternator output		Amps	80
	7-10	Battery voltage, rated capacity		V / Ah	12 / 175
DRIVE	8-1	Drive control / transmission		Type / #	Hydrodynamic / Automatic Powershift
	8-11	Service brake		Type	Oil immersed
	8-12	Parking brake		Type	Mechanical
MISC	10-1	Operating pressure for attachments		bar	0 - 155
	10-2	Oil volume for attachments **(10)**		l/min	83.3
	10-3	Hydraulic oil tank, capacity		l	51.0 (H4.0-H4.5FTS5) / 67.8 (H4.5FT6-H5.5FT)
	10-4	Fuel tank, capacity		l	79.0 (H4.0-H4.5FTS5) / 100.3 (H4.5FT6-H5.5FT)
	10-7	Sound pressure level at the driver's seat **(11)**	Lpaz	dB(A)	79
	10-7-1	Guaranteed sound power 2001/14/EC	Lwaz	dB	103
	10-8	Towing coupling, type DIN 15170			Yes/Pin

MODEL TABLE NOTES:

Specifications are affected by the condition of the vehicle and how it is equipped, as well as the nature and condition of the operating area. Inform your dealer of the nature and condition of the intended operating area when purchasing your Hyster® truck.

(1) Top of forks
(2) Without load backrest
(3) Full suspension seat in depressed position
(4) W/o load backrest, add 32mm with load backrest
(5) "Stacking aisle width (lines 4.34 & 4.34.1 &4.34.2) are based on the V.D.I. standard calculation as shown on illustration. The British Industrial Truck Association recommends the addition of 100 mm to the total clearance (dimension a) for extra operating margin at the rear of the truck"
(6) at 1.6 km/h
(7) at 4.8km/h. Gradeability figures are provided for comparison of tractive performance, but are not intended to endorse the operation of the vehicle on the stated inclines. Follow instructions in the operating manual regarding operation on inclines.
(8) to 15m
(9) Battery ampere hour (Ah) nominal capacity ratings are estimated.
(10) Variable
(11) Lpaz, measured according to the test cycles and based on the weighting values contained in EN12053
(12) Lwaz, Measured according to the test cycles and based on the weighting values contained in EN12053

MAST CAPACITY TABLE NOTES:

(1) With load backrest
(2) Without load backrest
***** Wide Tread or Dual Drive Wheels Required
****** Dual Drive Wheels Required

CE **Safety:** This truck conforms to the current EU requirements.

NOTICE:

Care must be exercised when handling elevated loads. Operators must be trained and must read, understand and follow the instructions contained in the Operating Manual.

All values are nominal values and they are subject to tolerances. For further information, please contact the manufacturer.

Hyster products are subject to change without notice.

Lift trucks illustrated may feature optional equipment. Values may vary with alternative configurations.

Specification data based on 3050mm (40/4.0 at 500 - 40/4.0 at 600) / 2800mm (45/4.5 at 500 - 55/5.5) TOF 2 stage LFL mast with standard carriage, 1000mm (40/4.0 at 500) / 1200mm (40/4.0 at 600 - 55/5.5) forks with e-hydraulics.

Specification data is based on VDI 2198.

H4.0FT5 / H4.0FT6 FORTENS ADVANCE

GENERAL	1-1	Manufacturer			HYSTER		HYSTER		HYSTER		HYSTER	
	1-2	Model designation			H4.0FT5		H4.0FT5		H4.0FT6		H4.0FT6	
		Model			Fortens Advance		Fortens Advance		Fortens Advance		Fortens Advance	
		Engine / transmission			Kubota 3.8L DuraMatch™ 1-speed		Kubota 3.8L DuraMatch™ 2 2-speed		Kubota 3.8L DuraMatch™ 1-speed		Kubota 3.8L DuraMatch™ 2 2-speed	
		Brake type			Oil Immersed Brakes or Premium Oil Immersed Brakes		Oil Immersed Brakes or Premium Oil Immersed Brakes		Oil Immersed Brakes or Premium Oil Immersed Brakes		Oil Immersed Brakes or Premium Oil Immersed Brakes	
	1-3	Drive			Diesel		Diesel		Diesel		Diesel	
	1-4	Operator type			Seated		Seated		Seated		Seated	
	1-5	Rated capacity/rated load	Q_1	t	4.0		4.0		4.0		4.0	
	1-6	Load centre distance	c	mm	500		500		600		600	
	1-8	Load distance, centre of drive axle to fork	x	mm	523		523		523		523	
	1-8-1	Load distance, centre of drive axle to fork (ISS Carriage)	x	mm	555		555		555		555	
	1-9	Wheelbase	y	mm	1830		1830		1830		1830	
WEIGHT	2-1	Service weight		kg	6264		6264		6470		6470	
	2-2-1	Axle loading with load, front / rear		kg	8969	1295	8969	1295	9133	1337	9133	1337
	2-3-1	Axle loading without load, front / rear		kg	2733	3531	2733	3531	2678	3792	2678	3792
WHEELS	3-1	Tyre type			Superelastic		Superelastic		Superelastic		Superelastic	
	3-2	Tyre size, front			250x15		250x15		250x15		250x15	
	3-3	Tyre size, front			7.00x12		7.00x12		7.00x12		7.00x12	
	3-5	Wheels, number front / rear (x = driven wheels)			2x / 2		2x / 2		2x / 2		2x / 2	
	3-6	Tread, front	b_{10}	mm	1152		1152		1152		1152	
	3-7	Tread, rear	b_{11}	mm	1136		1136		1136		1136	
DIMENSIONS	4-1	Tilt of mast / fork carriage forward / backward		(°)	6 / 10		6 / 10		6 / 10		6 / 10	
	4-2	Height, mast lowered	h_1	mm	2171		2171		2171		2171	
	4-3	Free lift **(1)**	h_2	mm	100		100		100		100	
	4-4	Lift **(1)**	h_3	mm	3000		3000		3000		3000	
	4-5	Height, mast extended **(2)**	h_4	mm	3815		3815		3815		3815	
	4-7	Height of overhead guard (cabin)	h_6	mm	2258		2258		2258		2258	
	4-8	Seat height relating to SIP **(3)**	h_7	mm	1279		1279		1279		1279	
	4-12	Coupling height	h_{10}	mm	429		429		429		429	
	4-19	Overall length	l_1	mm	3946		3946		3977		3977	
	4-20	Length to face of forks	l_2	mm	2946		2946		2977		2977	
	4-20-1	Length to face of forks (Integrated Side Shift Carriage)	l_2	mm	2978		2978		3009		3009	
	4-21	Overall width	b_1/b_2	mm	1402 / 1485 / 1773		1402 / 1485 / 1773		1402 / 1485 / 1773		1402 / 1485 / 1773	
	4-22	Fork dimensions DIN ISO 2331	s/e/l	mm	50 x 120 x 1000		50 x 120 x 1000		50 x 120 x 1200		50 x 120 x 1200	
	4-23	Fork carriage ISO 2328, class/type A, B		mm	IIIA		IIIA		IIIA		IIIA	
	4-24	Fork carriage width (Standard Carriage) **(4)**	b_3	mm	1219		1219		1219		1219	
	4-24	Fork carriage width (ISS Carriage) **(4)**	b_3	mm	1219		1219		1219		1219	
	4-31	Ground clearance, laden, below mast	m_1	mm	151		151		151		151	
	4-32	Ground clearance, centre of wheelbase	m_2	mm	194		194		194		194	
	4-34-1	Aisle width for pallets 1000 × 1200 crossways **(5)**	Ast	mm	4493		4493		4522		4522	
	4-34-4	Aisle width for pallets 800 × 1200 crossways **(5)**	Ast	mm	4493		4493		4522		4522	
	4-35	Turning radius	W_a	mm	2570		2570		2599		2599	
	4-36	Internal turning radius	b_{13}	mm	751		751		751		751	
PERFORMANCE	5-1	Travel speed with / without load		km/h	19.9	20.5	24.9	25.4	19.9	20.5	24.9	25.3
	5-1-1	Travel speed, laden/unladen, backwards		km/h	19.9	20.5	19.9	20.5	19.9	20.5	19.9	20.5
	5-2	Lifting speed with / without load		m/s	0.62	0.63	0.62	0.63	0.62	0.63	0.62	0.63
	5-3	Lowering speed with / without load		m/s	0.55	0.47	0.55	0.47	0.55	0.47	0.55	0.47
	5-5	Drawbar pull, laden/unladen **(6)**		N	25676	15616	30744	15616	25636	15292	30704	15292
	5-7	Gradeability - 1.6 km/h, with / without load **(7)**		%	26.9	27.2	32.8	27.2	26.3	25.7	32.0	25.7
	5-9	Acceleration time, laden/unladen		s	5.0	4.2	5.2	4.3	5.1	4.2	5.2	4.4
	5-10	Service brake			Hydraulic		Hydraulic		Hydraulic		Hydraulic	
	7-5	Fuel consumption according to VDI cycle		l/h	4.5		4.5		4.6		4.7	

H4.5FTS5 / H4.5FT6 FORTENS ADVANCE

GENERAL	1-1	Manufacturer			HYSTER		HYSTER		HYSTER		HYSTER	
	1-2	Model designation			H4.5FTS5		H4.5FTS5		H4.5FT6		H4.5FT6	
		Model			Fortens Advance		Fortens Advance		Fortens Advance		Fortens Advance	
		Engine / transmission			Kubota 3.8L DuraMatch™ 1-speed		Kubota 3.8L DuraMatch™ 2 2-speed		Kubota 3.8L DuraMatch™ 1-speed		Kubota 3.8L DuraMatch™ 2 2-speed	
		Brake type			Oil Immersed Brakes or Premium Oil Immersed Brakes		Oil Immersed Brakes or Premium Oil Immersed Brakes		Premium Oil Immersed Brakes		Premium Oil Immersed Brakes	
	1-3	Drive			Diesel		Diesel		Diesel		Diesel	
	1-4	Operator type			Seated		Seated		Seated		Seated	
	1-5	Rated capacity/rated load	Q_1	t	4.5		4.5		4.5		4.5	
	1-6	Load centre distance	c	mm	500		500		600		600	
	1-8	Load distance, centre of drive axle to fork	x	mm	591		591		591		591	
	1-8-1	Load distance, centre of drive axle to fork (ISS Carriage)	x	mm	608		608		608		608	
	1-9	Wheelbase	y	mm	1830		1830		2100		2100	
WEIGHT	2-1	Service weight		kg	6826		6826		7027		7027	
	2-2-1	Axle loading with load, front / rear		kg	10114	1212	10114	1212	10244	1283	10244	1283
	2-3-1	Axle loading without load, front / rear		kg	2931	3895	2931	3895	3195	3835	3195	3835
WHEELS	3-1	Tyre type			Superelastic		Superelastic		Superelastic		Superelastic	
	3-2	Tyre size, front			250x15		250x15		300x15		300x15	
	3-3	Tyre size, front			7.00x12		7.00x12		28x9-15		28x9-15	
	3-5	Wheels, number front / rear (x = driven wheels)			2x / 2		2x / 2		2x / 2		2x / 2	
	3-6	Tread, front	b_{10}	mm	1152		1152		1150		1150	
	3-7	Tread, rear	b_{11}	mm	1136		1136		1162		1162	
DIMENSIONS	4-1	Tilt of mast / fork carriage forward / backward		(°)	6 / 10		6 / 10		6 / 10		6 / 10	
	4-2	Height, mast lowered	h_1	mm	2215		2215		2215		2215	
	4-3	Free lift **(1)**	h_2	mm	100		100		100		100	
	4-4	Lift **(1)**	h_3	mm	2740		2740		2740		2740	
	4-5	Height, mast extended **(2)**	h_4	mm	3730		3730		3730		3730	
	4-7	Height of overhead guard (cabin)	h_6	mm	2258		2258		2300		2300	
	4-8	Seat height relating to SIP **(3)**	h_7	mm	1279		1279		1321		1321	
	4-12	Coupling height	h_{10}	mm	429		429		429		429	
	4-19	Overall length	l_1	mm	4266		4266		4457		4457	
	4-20	Length to face of forks	l_2	mm	3066		3066		3257		3257	
	4-20-1	Length to face of forks (Integrated Side Shift Carriage)	l_2	mm	3083		3083		3274		3274	
	4-21	Overall width	b_1/b_2	mm	1402 / 1485 / 1773		1402 / 1485 / 1773		1450 / 1575 / 1875		1450 / 1575 / 1875	
	4-22	Fork dimensions DIN ISO 2331	s/e/l	mm	60 x 150 x 1200		60 x 150 x 1200		60 x 150 x 1200		60 x 150 x 1200	
	4-23	Fork carriage ISO 2328, class/type A, B		mm	IVA		IVA		IVA		IVA	
	4-24	Fork carriage width (Standard Carriage) **(4)**	b_3	mm	1219		1219		1219		1219	
	4-24	Fork carriage width (ISS Carriage) **(4)**	b_3	mm	1219		1219		1372		1372	
	4-31	Ground clearance, laden, below mast	m_1	mm	151		151		194		194	
	4-32	Ground clearance, centre of wheelbase	m_2	mm	194		194		237		237	
	4-34-1	Aisle width for pallets 1000 × 1200 crossways **(5)**	Ast	mm	4542		4542		4828		4828	
	4-34-4	Aisle width for pallets 800 × 1200 crossways **(5)**	Ast	mm	4542		4542		4828		4828	
	4-35	Turning radius	W_a	mm	2619		2619		2837		2837	
	4-36	Internal turning radius	b_{13}	mm	751		751		800		800	
PERFORMANCE	5-1	Travel speed with / without load		km/h	19.8	20.4	24.6	25.3	18.7	19.2	23.2	23.9
	5-1-1	Travel speed, laden/unladen, backwards		km/h	19.8	20.4	19.8	20.4	18.7	19.2	18.7	19.2
	5-2	Lifting speed with / without load		m/s	0.45	0.46	0.45	0.46	0.45	0.46	0.45	0.46
	5-3	Lowering speed with / without load		m/s	0.51	0.42	0.51	0.42	0.51	0.42	0.51	0.42
	5-5	Drawbar pull, laden/unladen **(6)**		N	25468	16781	30536	16781	27516	18782	32917	18782
	5-7	Gradeability - 1.6 km/h, with / without load **(7)**		%	24.3	26.7	29.5	26.7	24.0	28.3	29.1	28.3
	5-9	Acceleration time, laden/unladen		s	5.3	4.3	5.3	4.3	5.4	4.5	5.5	4.7
	5-10	Service brake			Hydraulic		Hydraulic		Hydraulic		Hydraulic	
	7-5	Fuel consumption according to VDI cycle		l/h	4.9		5.1		5.1		5.3	

H5.0FT / H5.5FT FORTENS ADVANCE

GENERAL	1-1	Manufacturer			HYSTER		HYSTER		HYSTER		HYSTER	
	1-2	Model designation			H5.0FT		H5.0FT		H5.5FT		H5.5FT	
		Model			Fortens Advance		Fortens Advance		Fortens Advance		Fortens Advance	
		Engine / transmission			Kubota 3.8L DuraMatch™ 1-speed		Kubota 3.8L DuraMatch™ 2 2-speed		Kubota 3.8L DuraMatch™ 1-speed		Kubota 3.8L DuraMatch™ 2 2-speed	
		Brake type			Premium Oil Immersed Brakes		Premium Oil Immersed Brakes		Premium Oil Immersed Brakes		Premium Oil Immersed Brakes	
	1-3	Drive			Diesel		Diesel		Diesel		Diesel	
	1-4	Operator type			Seated		Seated		Seated		Seated	
	1-5	Rated capacity/rated load	Q_1	t	5.0		5.0		5.5		5.5	
	1-6	Load centre distance	c	mm	600		600		600		600	
	1-8	Load distance, centre of drive axle to fork	x	mm	591		591		591		591	
	1-8-1	Load distance, centre of drive axle to fork (ISS Carriage)	x	mm	608		608		608		608	
	1-9	Wheelbase	y	mm	2100		2100		2100		2100	
WEIGHT	2-1	Service weight		kg	7520		7520		7811		7811	
	2-2-1	Axle loading with load, front / rear		kg	11014	1478	11014	1478	11754	1558	11754	1558
	2-3-1	Axle loading without load, front / rear		kg	3206	4314	3206	4314	3134	4677	3134	4677
WHEELS	3-1	Tyre type			Superelastic		Superelastic		Superelastic		Superelastic	
	3-2	Tyre size, front			300x15		300x15		300x15		300x15	
	3-3	Tyre size, front			28x9-15		28x9-15		28x9-15		28x9-15	
	3-5	Wheels, number front / rear (x = driven wheels)			2x / 2		2x / 2		2x / 2		2x / 2	
	3-6	Tread, front	b_{10}	mm	1150		1150		1150		1150	
	3-7	Tread, rear	b_{11}	mm	1162		1162		1162		1162	
DIMENSIONS	4-1	Tilt of mast / fork carriage forward / backward		(°)	6 / 10		6 / 10		6 / 10		6 / 10	
	4-2	Height, mast lowered	h_1	mm	2215		2215		2215		2215	
	4-3	Free lift **(1)**	h_2	mm	100		100		100		100	
	4-4	Lift **(1)**	h_3	mm	2740		2740		2740		2740	
	4-5	Height, mast extended **(2)**	h_4	mm	3730		3730		3730		3730	
	4-7	Height of overhead guard (cabin)	h_6	mm	2300		2300		2300		2300	
	4-8	Seat height relating to SIP **(3)**	h_7	mm	429		429		429		429	
	4-12	Coupling height	h_{10}	mm	4266		4266		4457		4457	
	4-19	Overall length	l_1	mm	4500		4500		4541		4541	
	4-20	Length to face of forks (Standard Carriage)	l_2	mm	3300		3300		3341		3341	
	4-20-1	Length to face of forks (Integrated Side Shift Carriage)	l_2	mm	3317		3317		3358		3358	
	4-21	Overall width	b_1/b_2	mm	1450 / 1575 / 1875		1450 / 1575 / 1875		1450 / 1575 / 1875		1450 / 1575 / 1875	
	4-22	Fork dimensions DIN ISO 2331	s/e/l	mm	60 x 150 x 1200		60 x 150 x 1200		60 x 150 x 1200		60 x 150 x 1200	
	4-23	Fork carriage ISO 2328, class/type A, B		mm	IVA		IVA		IVA		IVA	
	4-24	Fork carriage width (Standard Carriage) **(4)**	b_3	mm	1219		1219		1219		1219	
	4-24	Fork carriage width (ISS Carriage) **(4)**	b_3	mm	1219		1219		1372		1372	
	4-31	Ground clearance, laden, below mast	m_1	mm	151		151		194		194	
	4-32	Ground clearance, centre of wheelbase	m_2	mm	194		194		237		237	
	4-34-1	Aisle width for pallets 1000 × 1200 crossways **(5)**	Ast	mm	4868		4868		4906		4906	
	4-34-4	Aisle width for pallets 800 × 1200 crossways **(5)**	Ast	mm	4868		4868		4906		4906	
	4-35	Turning radius	W_a	mm	2877		2877		2915		2915	
	4-36	Internal turning radius	b_{13}	mm	800		800		800		800	
PERFORMANCE	5-1	Travel speed with / without load		km/h	18.7	19.2	23.2	23.9	18.6	19.2	22.9	23.9
	5-1-1	Travel speed, laden/unladen, backwards		km/h	18.7	19.2	18.7	19.2	18.6	19.2	18.6	19.2
	5-2	Lifting speed with / without load		m/s	0.45	0.46	0.45	0.46	0.45	0.46	0.45	0.46
	5-3	Lowering speed with / without load		m/s	0.51	0.42	0.51	0.42	0.51	0.42	0.51	0.42
	5-5	Drawbar pull, laden/unladen **(6)**		N	27458	18399	32859	18399	27302	17976	32703	17976
	5-7	Gradeability - 1.6 km/h, with / without load **(7)**		%	23.3	26.5	28.3	26.5	21.7	24.8	26.3	24.8
	5-9	Acceleration time, laden/unladen		s	5.4	4.5	5.5	4.6	5.6	4.5	5.6	4.7
	5-10	Service brake			Hydraulic		Hydraulic		Hydraulic		Hydraulic	
	7-5	Fuel consumption according to VDI cycle		l/h	5.4		5.8		5.8		6.2	

STANDARD AND OPTIONAL EQUIPMENT

PERFORMANCE	STD	OPT
Hyster Fortens Advance	X	
Kubota 3.8L diesel engine	X	
Stage V compliant	X	
Combi Cooler Radiator	X	
Radiator Screen		X
Upswept Exhaust	X	
Exhaust Wraps		X
Powertrain Protection System with Engine Shutdown		X
High Air Intake	X	
High Air Intake with Precleaner		X
Heavy Duty Air Filter		X
DuraMatch™ - 1 Speed Transmission	X	
DuraMatch™ 2 - 2 Speed Transmission		X
Oil-immersed brakes	X	
Premium oil-immersed brakes	X	
DRIVE	**STD**	**OPT**
Traction speed limiter - unconditional (adjustable)		X
Traction Speed Limiter pre-set to 13km/h (Adjustable)*		X
Indoor Speed Reduction*		X
Standard Tread	X	
Wide Tread		X
Dual Tread		X
7.00x15-14 Pneumatic Drive Tyres (Dual Tread)		X
7.00x15 Superelastic Drive Tires (Dual Tread)		X
7.00 R15 Pneumatic Radial Drive Tyres (Dual Tread)		X
8.25x15-14 Pneumatic Drive Tyres (Dual Tread)		X
8.25x15 Superelastic Drive Tyres (Dual Tread)		X
8.25 R15 Pneumatic Radial Drive Tyres (Dual Tread)		X
250x15 Superelastic Drive Tires (Standard Tread) - H4.0FT5-H4.0FT6	X	
250x15 Superelastic Drive Tyres (Wide Tread)		X
250x15 Non-Marking Superelastic Drive Tyres (Standard Tread)		X
250x15-20 Pneumatic Drive Tyres (Standard Tread)		X
250x15-20 Pneumatic Drive Tyres (Wide Tread)		X
250/70 R15 Pneumatic Radial Drive Tyres (Standard Tread)		X
250/70 R15 Pneumatic Radial Drive Tyres (Wide Tread)		X
300x15 Superelastic Drive Tyres (Standard Tread) - H4.5-5.5FT	X	
300x15 Superelastic Drive Tyres (Wide Tread)		X
300x15 Non-Marking Superelastic Drive Tyres (Standard Tread)		X
300x15-20 Pneumatic Drive Tyres (Standard Tread)		X
300x15-20 Pneumatic Drive Tyres (Wide Tread)		X
315/70 R15 Pneumatic Radial Drive Tyres (Standard Tread)		X
315/70 R15 Pneumatic Radial Drive Tyres (Wide Tread)		X
7.00x12 Superelastic Steer Tires - H4.0FT5-H4.0FT6	X	
7.00 R12 Pneumatic Radial Steer Tyres		X
7.00x12 Non-Marking Superelastic Steer Tyres		X
7.00x12-14 Pneumatic Steer Tyres		X
7.00x12-16 Pneumatic Steer Tyres		X
28x9-15 Superelastic Steer Tyres - H4.5-5.5FT	X	
28x9-15 Superelastic Heavy Duty Steer Tyres		X
28x9-15 Non-Marking Superelastic Steer Tyres		X
LIFT	**STD**	**OPT**
2 Stage Limited Free Lift	X	
2 Stage Full Free Lift		X
3 Stage Full Free Lift		X
Lift Height - 2800mm (2215mm Lowered Height) - H4.0FT5-H4.0FT6	X	
Lift Height - 3050mm (2175mm Lowered Height) - H4.5-5.5FT	X	
Various other Lift Heights		X

LIFT *(continued)*	STD	OPT
Mast tilt - 6° Forward / 10° Back		X
Mast tilt - 6° Forward / 6° Back	X	
Mast tilt - 6° Forward / 5° Back		X
Mast tilt - 6° Forward / 4° Back		X
Mast tilt - 6° Forward / 3° Back		X
Mast tilt - 12° Forward / 6° Back		X
Tilt Speed Restrictor - 1 degree per second (Mechanical)		X
Tilt Speed Restrictor - 1 degree per second (Electronically Adjusted)		X
Chain Slack Prevention Valve		X
Hydraulic Accumulator		X
Auxiliary Hydraulic System Cooler		X
High Temperature Hydraulic Fluid		X
HANDLING	**STD**	**OPT**
Auto Speed Hydraulics		X
Mechanical lever hydraulic controls, designed for clamping applications		X
TouchPoint™ mini lever hydraulic controls, designed for clamping applications		X
TouchPoint™ mini levers hydraulic control with Return to Set Tilt		X
TouchPoint™ mini levers hydraulic control with Return to Set Tilt, designed for clamping applications		X
3 Function (1 Auxiliary) Hydraulic Valve	X	
4 Function (2 Auxiliary) Hydraulic Valve		X
5th hydraulic function controlled by solenoid		X
Without Hose Group	X	
Attachment Extension Tubes - 1 Pair		X
Attachment Extension Tubes - 2 Pair		X
Quick Disconnect Auxiliary Extension Tubes - 1 Pair		X
Quick Disconnect Auxiliary Extension Tubes - 2 Pair		X
1220mm Carriage - Class 4	X	
1220mm Integral Sideshift Carriage with Fork Positioner		X
1370mm Hook Type Attachment Carriage - Class 3		X
1372mm Attachment Carriage - Class 3		X
1372mm Integral Sideshift Carriage with Fork Positioner		X
1372mm Integral Sideshift Carriage - Class 4		X
1524mm Carriage - Class 4		X
1524mm Integral Sideshift Carriage - Class 4		X
1525mm Integral Sideshift Carriage with Fork Positioner		X
Meyer Double Pallet Handler : 6-5207F a (EURO PALLETS)		X
Meyer Double Pallet Handler : 21PH32B-56SG-3A (CHEP/UK PALLETS)		X
1220mm Load backrest	X	
1000 x 120 x 50mm Hook Type Standard Taper Forks - Class 3 (H4.0FT5)	X	
1100 x 120 x 50mm Hook Type Standard Taper Forks - Class 3		X
1200 x 120 x 50mm Hook Type Standard Taper Forks - Class 3 (H4.0FT6)	X	
1200 x 150 x 60mm Hook Type Standard Tapered Forks - Class 4 (H4.05FT-5.5FT)	X	
1300 x 150 x 60mm Hook Type Standard Taper Forks		X
1400 x 120 x 50mm Hook Type Standard Taper Forks - Class 3		X
1400 x 150 x 60mm Hook Type Standard Taper Forks		X
1500 x 150 x 50mm Hook Type Standard Taper Forks - Class 3		X
1500 x 150 x 60mm Hook Type Standard Tapered Forks - Class 4		X
1600 x 150 x 50mm Hook Type Standard Taper Forks		X
1600 x 150 x 60mm Hook Type Standard Taper Forks		X
1800 x 150 x 50mm Hook Type Standard Taper Forks - Class 3		X
1800 x 150 x 60mm Hook Type Standard Taper Forks		X
2000 x 150 x 50mm Hook Type Standard Taper Forks		X
2000 x 150 x 60mm Hook Type Stanard Taper Forks		X

STANDARD AND OPTIONAL EQUIPMENT

HANDLING *(continued)*	STD	OPT
2200 x 150 x 60mm Hook Type Standard Taper Forks		X
2400 x 150 x 60mm Hook Type Standard Taper Forks		X
CAB	**STD**	**OPT**
Full Steel Modular Cab with Steel doors and heater		X
Full Steel Modular Cab with PVC doors		X
Full Steel Cab with Air Conditioning		X
Full Steel Cab with Low Noise Cab Kit		X
Full Steel Cab with Low Noise Cab Kit with Air Conditioning		X
Top Sun Blind for Cab Trucks		X
Front Sun Blind for Cab Trucks		X
Auxiliary Equipment Mounting Bar		X
WEATHER PROTECTION	**STD**	**OPT**
Air conditioning		X
Cab heater		X
Glass Top Screen		X
Solid Top Screen + Front Screen with Washer/Wiper		X
Solid Top Screen + Front & Rear Screen with Washer/Wipers		X
Solid Top Screen + Front & Rear Screen with Washer/Wipers + PVC Doors		X
Laminated Glass Front and Rear Screen		X
Laminated Glass Front and Rear Screen and Fixed Door Windows		X
Laminated Glass Front Screen		X
ERGONOMICS	**STD**	**OPT**
2258mm High Overhead Guard - H4.0-4.5FTS5	X	
2300mm High Overhead Guard - H4.5FT6-H5.5FT	X	
2174mm Lowered Overhead Guard (Flat Plate) (H4.0-4.5FTS5)		X
2216mm Lowered Overhead Guard (Flat Plate) (H4.5FT6-H5.5FT)		X
Raised Operator Compartment		X
Load Weight Display		X
Operator Password		X
Operator Pre-Shift Electronic Checklist		X
Dual Mirrors Side View		X
Rear Drive Handle with Horn Button	X	
Non Suspension Vinyl Seat		X
Full Suspension Vinyl Seat	X	
Full Suspension Cloth Seat		X
Full Suspension Swivel Vinyl Seat		X
Full Suspension Swivel Cloth Seat		X
Heated Full Suspension Cloth Seat		X
High Backrest Lumbar Support Vinyl		X
High Backrest Lumbar Support Cloth		X
Full Suspension FLM36 (Low Profile) Vinyl Seat		X
Full Suspension FLM36 (Low Profile) Cloth Seat		X
Grammer Air Suspension Vinyl Seat		X
Grammer Air Suspension Cloth Seat		X
Air-Suspension Seat FLA Vinyl Seat		X
Air-Suspension Seat FLA Cloth Seat		X
Standard Seat Belt	X	
Hi-Vis Red Seat Belt		X
Hi-Vis Red Seat Belt with Interlock		X
Hi-Vis Red Seat Belt with Sequential Interlock		X
Manual lever hydraulic controls	X	
TouchPoint™, mini lever hydraulic controls		X
Joystick hydraulic controls		X
Steering wheel with spinner knob	X	
Directional Lever	X	
Monotrol		X
Directional Control Switch (Integrated in Arm rest)		X
Dash Mounted 12V Auxiliary Power Outlet		X

VISIBILITY	STD	OPT
Halogen work lights	X	
LED work lights		X
Work Light Package - 2 Front and 1 Rear Halogen Work Lights with Side, Stop, Tail, & Reverse Lights	X	
Work Light Package - 2 Front and 1 Rear LED Work Lights with Side, Stop, Tail, & Reverse Lights		X
Automatic Lights		X
Mast Mounted LED Lights		X
LED Work Light Protection		X
OPERATION	**STD**	**OPT**
Impact Monitor with 30 Second Shutdown		X
Impact Monitor with Immediate Shutdown		X
Engine, Lights and Display Shutdown (Seat Switch Activated)		X
Engine Shutdown (Seat Switch Activated)		X
System Monitoring System	X	
Premium Monitoring System		X
Vented Hood		X
Non-Vented Hood	X	
Belly Pan		X
Visible alarm – Amber strobe light		X
Audible alarm – Reverse direction activated		X
Hazard Warning Lights - Keyswitch Activated		X
Hazard Warning Lights - Switch Activated		X
Pedestrian Awareness Light (P.A.L.)		X
Front Pedestrian Awareness Light (P.A.L.)		X
Red Line (Side) Pedestrian Awareness Lights (P.A.L.)		X
Battery Disconnect		X
Key switch start	X	
Push Button with Operator Password		X
Single Pedal Inch Brake	X	
Hyster Tracker wireless asset management system		X
Hyster Tracker wireless asset management - Access		X
Hyster Tracker wireless asset management - Verification		X
Hyster Tracker wireless asset management - Monitoring		X
3 Point Lifting Eyes Diesel		X
4 Point Lifting Eyes		X
APPEARANCE	**STD**	**OPT**
Hyster yellow paint base truck	X	
Special paint base truck		X
Hazard warning striping on counterweight		X
PACKAGES	**STD**	**OPT**
Cool Truck Package which includes High Air Intake with Precleaner, Exhaust Wraps, Powertain Protection System with Engine Shutdown, Premium Monitoring, Hydraulic Accumulator, High Temperature Hydraulic Fluid and Vented Hood		X
Paper Roll Package which includes Air Intake with Precleaner, Exhaust Wraps, Powertain Protection, Premium Monitoring, Traction Speed Limiter, Hydraulic Accumulator, Chain Slack Prevention Valve, Hydraulic Fluid, Belly Pan, Vented Hood and P.A.L		X
SUPPLEMENTAL	**STD**	**OPT**
Literature package	X	
UL Classification Type "G/LP" - Includes UL Label		X
CE certification	X	
Warranty: 12 Months / 2,000 Hours manufacturer's warranty	X	
Warranty: 36 Months / 6,000 Hours extended warranty		X

**Standard or Optional in select markets or on select models.*
Please refer to the Price List for full option configurations.
Other options available through Special Products Engineering Department (SPED). Contact Hyster for details.

PRODUCT FEATURES

As the first choice materials handling partner for the world's demanding operations, Hyster delivers value added solutions and dependable products through the strongest distribution network in the industry. Hyster Fortens™ - The Solution to your Application Needs.

Protected Powertrain

The durable powertrain is computer controlled, protected and managed by the Pacesetter™ VSM electronic management system, featuring a CANbus communications network. The VSM ensures maximum uptime and dependability, as it allows for fast and accurate trouble-shooting, facilitates first-time fixes and can help to minimise costly "parts swapping".

DuraMatch™ - The World's Most Advanced Powershift Transmission

The electronically controlled DuraMatch™ transmissions provide smoother directional changes to eliminate shock loading and extend the life of the clutch packs. These transmissions offer unique and patented features, managed by the VSM, such as the Auto Deceleration System, which contributes to extending brake and tyre life and so reduces the frequency of required changes and ultimately your overall operating costs.

Autospeed Hydraulics

If the Autospeed Hydraulics option is selected when lifting a load the engine speed is automatically increased to provide full hydraulic power. The Pacesetter VSM maintains the current travel speed (or prevents travel) until the operator steps on the accelerator. No operator inching is required and productivity and efficiency is increased by simplifying operator actions.

Hassle-Free Electrical & Hydraulic Systems

The CANbus system ensures reliable operation of the truck, providing reduced wiring complexity and keeps them away from heat sources. Non contact Hall-Effect sensors and switches are environmentally sealed to IP66 standards to keep out water and debris (allowing the truck to be pressure washable) and are designed to outlast the life of the truck. The Hyster Fortens™ is equipped with hassle-free hydraulic systems, featuring Leak-free O-ring face seal fittings which reduce leaks for enhanced reliability.

More Dependable in Demanding Applications

Aluminium core radiators and a superior counterweight tunnel design coupled with a "pusher" type fan provide the industry's best cooling, ensuring that the truck operates at lower temperatures, which results in increased component life and limits the risk of overheating, particularly in heavy duty applications. In addition, the long term durability of the truck is enhanced by the available powertrain protection systems.

High-performance In-tank Hydraulic Filter

Superior filtration system increases life span of all hydraulic components such as hoses and pumps.

Significant savings in ownership costs per lift truck – each year

The Hyster Fortens™ has been designed to help you lower your ownership costs in all types of applications, through offering a wide range of engine and transmission options to suit the application need.

STRONG PARTNERS. TOUGH TRUCKS.™
FOR DEMANDING OPERATIONS, EVERYWHERE.

Hyster® supplies a complete range of warehouse equipment, IC and electric counterbalanced trucks, container handlers and reach stackers. Hyster® is committed to being much more than a lift truck supplier.

Our aim is to offer a complete partnership capable of responding to the full spectrum of material handling issues: whether you need professional consultancy on your fleet management, fully qualified service support, or reliable parts supply, you can depend on Hyster®.

Our network of highly trained dealers provides expert, responsive local support. They can offer cost-effective finance packages and introduce effectively managed maintenance programmes to ensure that you get the best possible value. Our business is dealing with your material handling needs so you can focus on the success of your business today and in the future.

HYSTER EUROPE

Centennial House, Frimley Business Park, Frimley, Surrey, GU16 7SG, England.

Tel: +44 (0) 1276 538500

www.hyster.eu **infoeurope@hyster.com** **/HysterEurope** **@HysterEurope** **/HysterEurope**

HYSTER-YALE UK LIMITED trading as Hyster Europe. Registered Address: Centennial House, Building 4.5, Frimley Business Park, Frimley, Surrey GU16 7SG, United Kingdom. Registered in England and Wales. Company Registration Number: 02636775.

©2019 HYSTER-YALE UK LIMITED, all rights reserved. HYSTER, , STRONG PARTNERS. TOUGH TRUCKS., FORTENS, DURAMATCH, TOUCHPOINT, MONOTRO and are trademarks of HYSTER-YALE Group, Inc. Yanmar is a trademark of Yanmar Co. Ltd. Kubota is a trademark of Kubota Corporation. Continental is a trademark of Continental AG. Grammer is a trademark of Grammer Seating Systems Ltd. BOLZONI is a trademark of Bolzoni SpA. AURAMO is a trademark of Auramo Oy. MEYER is a trademark of Hans H. Meyer, GmbH.

Hyster products are subject to change without notice. Forklift trucks illustrated may feature optional equipment.

Printed in EU. Part number: 3990304 Rev. 15-01/19-TLC